Ellis

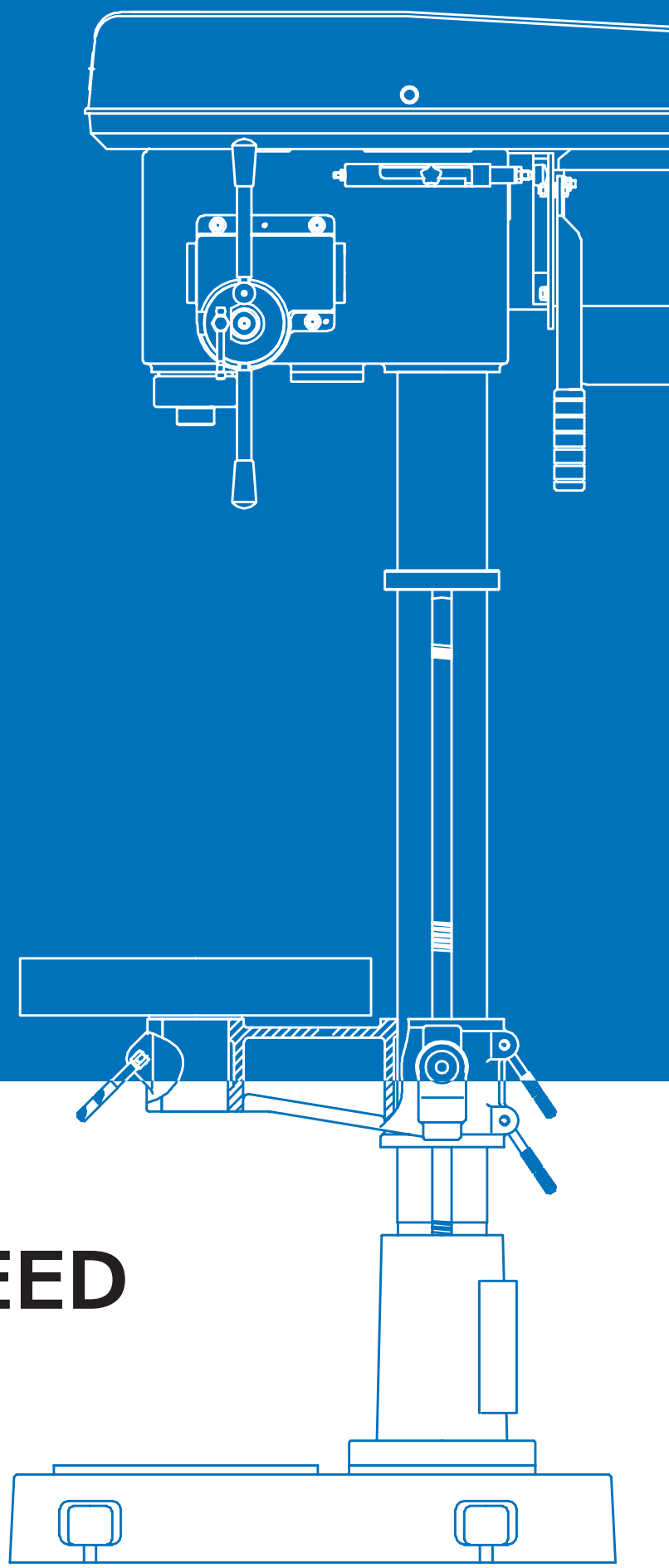

OWNER'S MANUAL

9400 VARIABLE SPEED DRILL PRESS

SERIAL NUMBER: _____

DATE PURCHASED: _____

POWER FEED DRILL PRESS

Infinitely Variable Speed
Model 9400

Note: Ellis Manufacturing Co. Inc. reserves the right to make enhancements to the product at any time. Parts may change or improve, and the images displayed may not represent the actual product shipped.

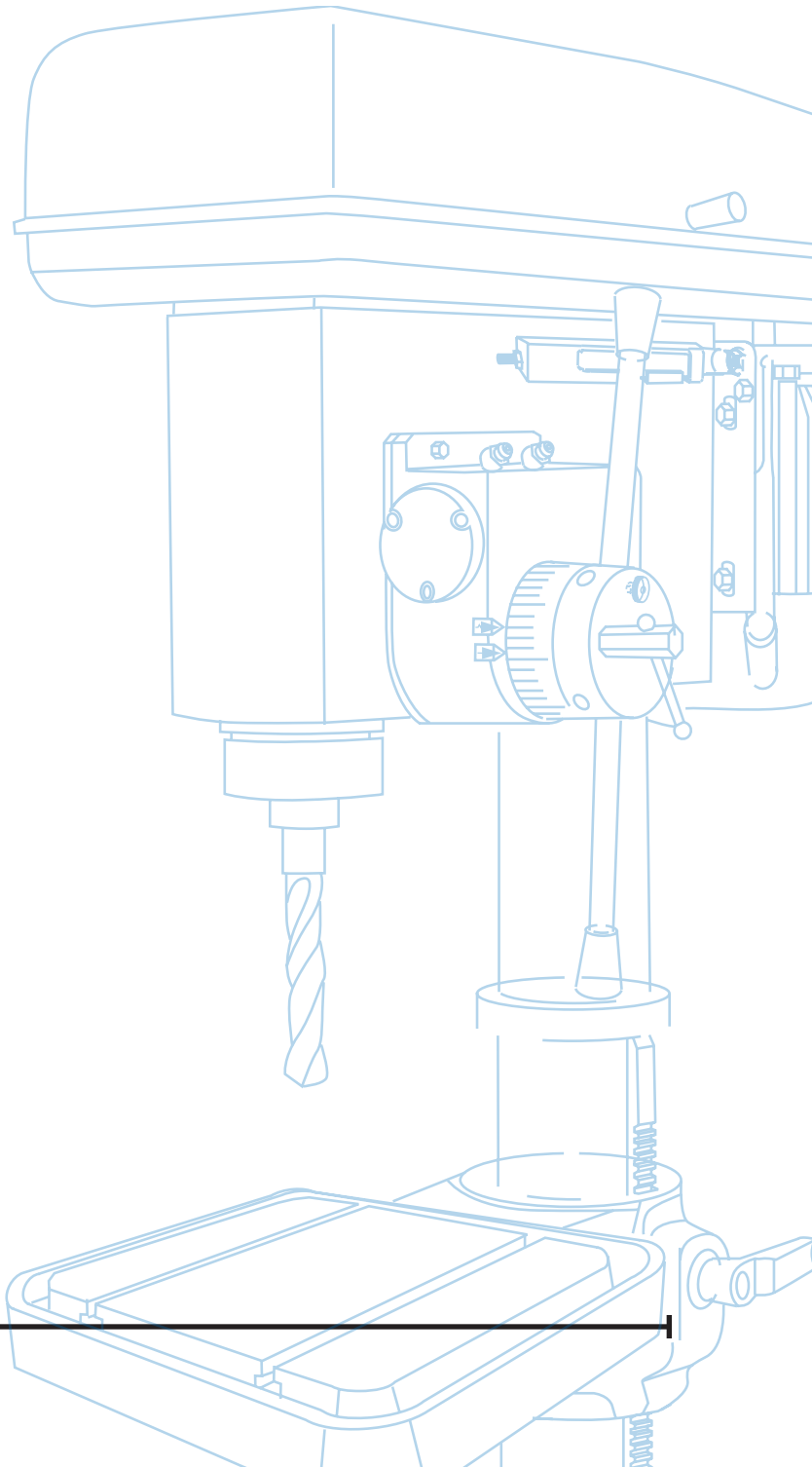

TABLE OF CONTENTS

3 Important Information
4 Safety
6 Drill Specifications
7 Variable Speed Control Box
8 Torque Range Operation Instructions
9 Speed & Torque Range Overview
10 Power Train Overview
11 Power Train: Depth of Drilled Hole
12 Drill Chuck and Arbor
14 Parts List
18 Maintenance
19 Troubleshooting
20 Accessories
22 Maintenance Log
23 Overview of Terms

IMPORTANT INFORMATION!!

Thank you for purchasing the Ellis Model 9400 Drill Press (2HP–110V or 220V). This machine is suitable for:

- Drilling, Reaming and Tapping: Metal, Metal Alloys, Plastic, or Wood.

FEATURES

- Three (3) speed ranges controlled by a Variable Speed (VS) Control Box.
- Three (3) torque ranges by moving a shift handle with locking feature.
- One switch for forward and reversing direction.

BEFORE USING THIS DRILL PRESS

- **Read this manual carefully for operation and maintenance of this drill press.**
- Keep the drill press in good operational condition.
- Keep it clean.
- **Do NOT tamper with the wiring or settings—this will void the warranty.**

PROPER ELECTRICAL INSTALLATION/CONNECTION

WARNING:

- **Use a 110-Volt, 20 amp, 60 Hz grounded power circuit.**
- **No GFCI (Ground Fault Circuit Interrupter).**
- **Adapters, extension cords and surge protectors will prove to be problematic with the drill press.**

GENERAL INFORMATION

- For optimum performance, the Variable Speed Control Box assembly is preset at the factory (Ellis).
- Adjusting speed and torque (see page 8).
- Lubrication and maintenance (see page 18).
- Adjusting table (see page 13).
- Powered by 110 Volts, the Variable Speed Control Box (#4830) converts and drives a three-phase, 220-Volt electric motor at variable speeds.
- Needs 220 Volts (#4831).

INSTALLATION INSTRUCTIONS

The Ellis Variable Speed Drill Press is crated and shipped completely assembled.

- Check for transit damage upon delivery.
- After uncrating, place the drill press on a flat, solid floor within reach of a power source.
- If the drill press rocks, place shims under the base to remove motion.
- Bolt the machine to the floor using four (4) holes in base.
- Unpainted surfaces are protected with a film of heavy grease.
- Remove grease with mineral spirits.
- Apply a thin coat of oil to machined surfaces.
- Morse Taper Bore must be cleaned of grease using mineral spirits and by twisting a rag up into the bore.

SAFETY

WARNING
Disconnect Power Cord From the Wall Outlet Before Any Maintenance!

GENERAL OPERATING SAFETY

1. Always wear safety glasses.
2. Do not wear gloves, necktie, loose clothing, jewelry or other items that may get caught in moving parts. Long hair should be tied up and under a cap.
3. **Do not hold by hand.** Use Safety Drill Press Vise. Always clamp material to worktable. Utilize two (2) T-Slots in worktable or base of the drill press for additional holding points using T-Bolts, clamps and hold downs. Always use accessories sold for this machine for accuracy and safety.
4. Use recommended speeds that are proper for the drill, the material being drilled and accessories used.
5. Make a habit of removing the chuck key, drift key and other wrenches after their use.
6. Keep hands and fingers clear of the drill bit or cutter.
7. Shut off the power by using #4819 Emergency Stop Button (red in color) before removing or installing drill bits or cutting tools.
8. Be sure that the head stock and worktable are securely clamped to the column. Always use accessories sold for this machine for accuracy and safety.
9. Be sure the drill bit or cutting tool is securely clamped in the chuck.
10. Keep cover (of belts and pulleys) in place and closed.
11. Do not operate the machine beyond its capacity.
12. Maintain the machine regularly, keep it clean, and keep a maintenance lubrication log.

SAFETY AND INFORMATION LABELS

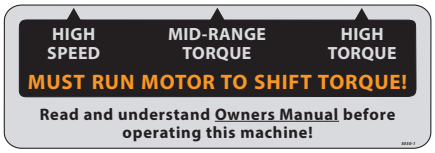

5050 Shift Speed Label

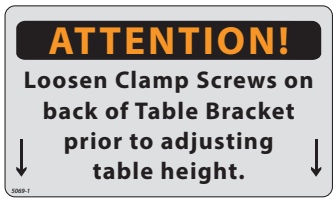

5069 Attention Label

5062 Operating Label

5061 Forward/Reverse Label

5051 Warning Label

5059 Ellis Logo Label

WARNING:

Disconnect the power cord from the wall outlet before any maintenance.

VARIABLE SPEED CONTROL BOX

1. **Do not open the Variable Speed (VS) Control Box. Tampering with the wiring or setting will void the warranty.** The circuit board is not field repairable. **Do not touch or adjust** anything without calling Ellis Manufacturing Co. for instructions. The circuits in the VS Control Box are not isolated. Elements of the circuit board are at 230 Volts. Direct contact with these circuits can cause serious injury.
2. The control circuit is not fail-safe. A disconnect at the wall outlet is the only way to reliably disable the VS Control Box.
3. While power is ON or for some time after power-OFF, do not touch the VS Control Box since the VS Control box will be extremely hot. **Doing so can cause burns.**
4. If you have problems with the Variable Speed Control Box, contact the factory M–F, 7:30 am – 4:00 pm CST.

4830 — Variable Speed Control Box ASSY

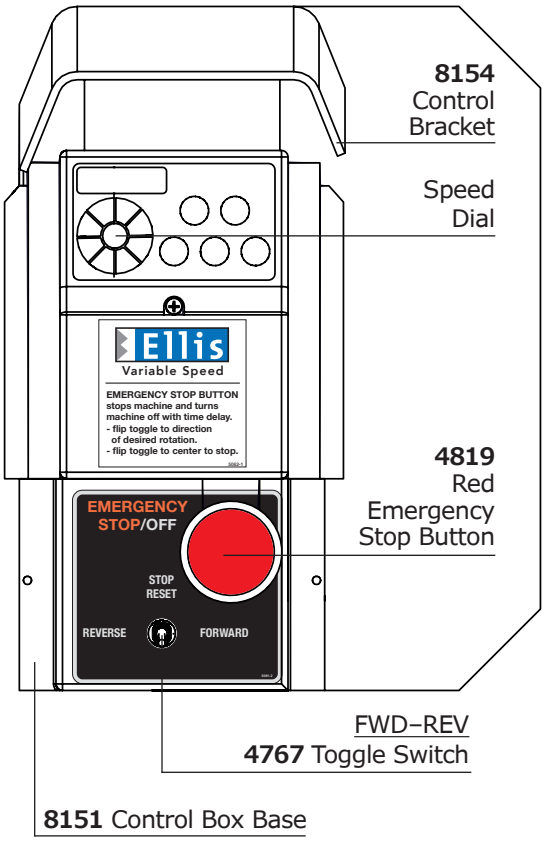

CAUTION ⚠

DO NOT WEAR:
JEWELRY, LOOSE CLOTHING, GLOVES

TIE BACK LONG HAIR WHEN OPERATING THIS EQUIPMENT

DRILL SPECIFICATIONS

Machine Specifications	
Drive	Belt and Variable Speed Control
Maximum Drill Diameter	1.062" Steel; 1.25" Cast Iron
Tapping Capacity	3/4" – 10 NC
T-Slots	Two (2) 0.55" Slots on Worktable and Base
Overall Size of Table	15.88" x 17.88"
Table Machined Surface	15.88" x 17.88"
Overall Size of Base	16.38" x 26.62"
Base Machined Surface	11.80" x 12.60"
Power Feed Rate per Spindle Revolution	0.004"
Diameter of Column	4"
Recessed Diameter of Quill	3"
Exposed Diameter of Quill	3.75"
Maximum Spindle Travel	5.375"
Spindle Inner Taper	Morse Taper #3 (MT3)
Spindle Speed	Variable; 0–1200 rpm
Spindle to Table	27.25"
Maximum Distance Spindle Nose to Base Surface	46.25"
Drills to Center	18.12"
Net Weight	677 lbs.
Overall Size	20" width x 29" depth x 69.5" height

Motor Specifications	
Horsepower	2 (1.5kW)
Voltage	110 V
Hertz	60
Amp	6.8
Duty	S1
Phase	3
Type	Induction B Grade

DRILL PRESS ACCESSORIES

Increase Accuracy and Performance

See pages 20–21

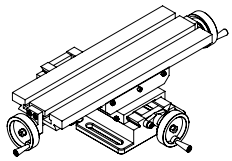

MILLING TABLE

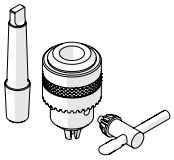

DRILL CHUCK

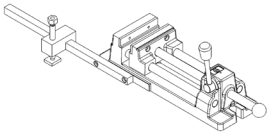

6.25" DRILL PRESS VISE

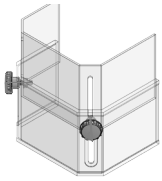

POLYCARBONATE CHUCK GUARD

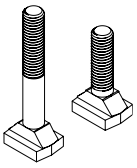

T-SLOT BOLTS

VARIABLE SPEED CONTROL BOX ASSY (4830)

SET UP

Important: DO NOT plug into a GFCI circuit.

It is highly recommended to shift into High Torque using the Torque Bolt Range ASSY. (For larger diameter drills, tapping and hole saws, see page 8 for more information.)

1. **Start** Turn the Red Emergency Stop Button clockwise (in the direction of the arrows) so that the button will pop out and the read out window will light up. Flip the Forward/Reverse switch to the reset position, then to the desired direction of forward or reverse.
2. **Speed Change** The black dial in the upper left hand corner regulates the spindle speed. See page 9 for RPM matrix using VARIABLE SPEED PULLEY or SPRING & 2-STEP PULLEY. It works in both the forward and reverse mode.
3. **Forward Toggle Switch Position** (#4767) Use the Forward Switch Position for standard drilling, tapping and hole saw cutting.
4. **Reverse Toggle Switch Position** (#4767) Use the Reverse Switch Position to retract a tap or to tap a left hand thread. Keep downward pressure on the Feed Handle when backing a tap out of the work piece.
5. **Stop/Reset Toggle Switch Position** (#4767) This setting stops the motor from either forward or reverse rotation. Use this as the Stop Switch while operating the drill press. Move the Toggle Switch to reset position after a power outage or after hitting the Red Emergency Stop Button (#4819).
6. **Stop** The Red Emergency Stop Button stops the machine and automatically disconnects the machine from electrical power after a time delay of about twenty seconds. **Use this as the Power Off switch at the end of the work day.**

NOTE: Avoid stalling the spindle and stopping the motor under power. Turn Power off immediately in a stalled motor condition. Clear the jam mechanically. Repeated stalling abuse is detectable and can lead to voiding the warranty.

4830 — Variable Speed Control Box ASSY

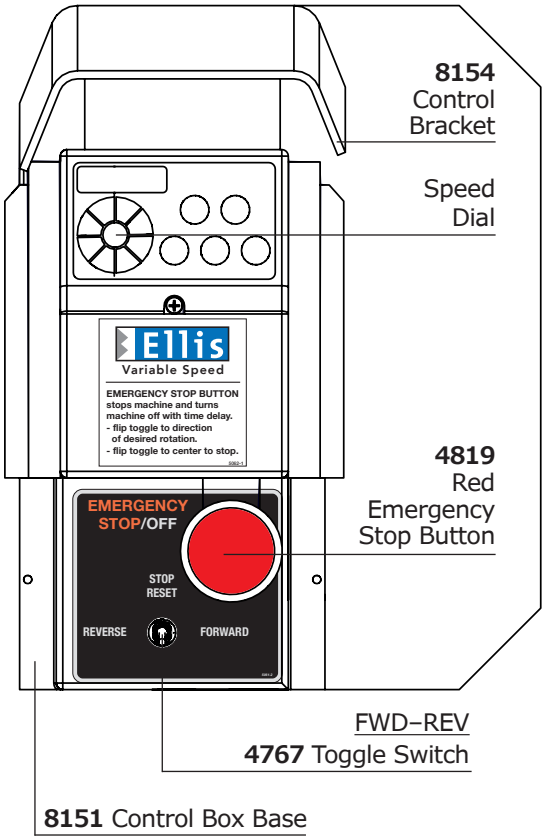

TORQUE RANGE OPERATION

WITH VARIABLE SPEED PULLEY

OPERATING INSTRUCTIONS

1. Turn on the drill press and run it at moderate speed. **NOTE: The motor must be moving at a moderate speed to change the torque range selection.**
2. Grasp the Shift Handle that is attached to the Motor Mounting Plate and raise it to a horizontal position with your right hand. **See Figure A.**
3. Push forward on the Shift Handle just enough to relieve the pressure on the Torque Bolt Range ASSY. **Refer to Figure B and C.**
4. Loosen the Range Knob and raise it out of the position locking slot. **See Figure C.**
5. Push the Motor and the Torque Bolt Range ASSY forward to reduce the spindle speed and increase the torque. Moving the Torque Bolt Range ASSY and the motor in the opposite direction will increase the spindle speed.

NOTE: Make sure that the Range Knob is fully seated in the locking slot when in the MID-RANGE TORQUE or HIGH TORQUE positions.

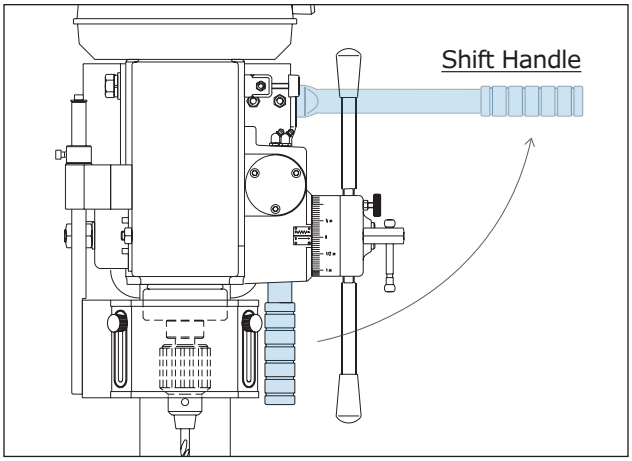

Figure A

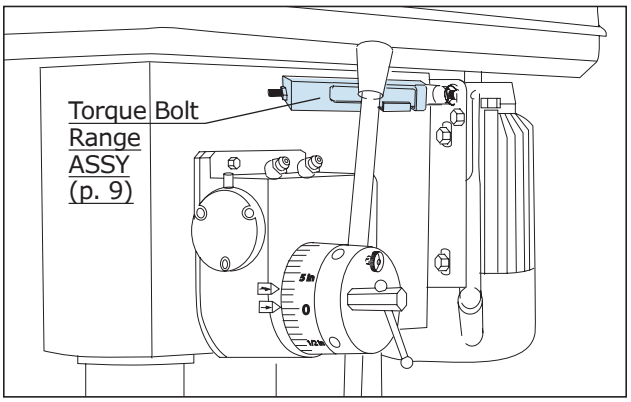

Figure B

MACHINE SPEED CONTROL CAPABILITY

NOTE: The complete speed variation from zero to the maximum of each range is made electronically using the speed control dial on the Ellis Variable Speed Control Box (+/- 10%).

- **High Speed**, 0 to approximately 1265 RPM range. This is the range best suited for small drills.
- **Mid-Range Torque**, 0 to approximately 930 RPM speed. This is the general purpose drilling range.
- **High Torque**, 0 to approximately 570 RPM. This range provides the highest torque. Use it for larger drills and taps and for cutting large holes using Hole Saws.

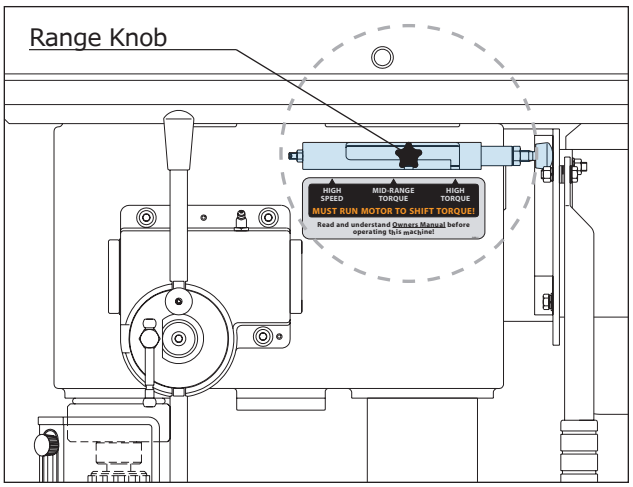

Figure C

SPEED & TORQUE RANGE OVERVIEW

SPINDLE SPEED

The motor (#4647) drives the middle sheave (#8495) and the spindle pulley (#8434) by V-Belts. The spindle pulley drives the spindle and the taper sleeve. The spindle speed is variable by means of the Variable Speed Control Box and/or with Shift Handle. Forward and reverse rotation of the spindle is selected on the VS Control Box Panel.

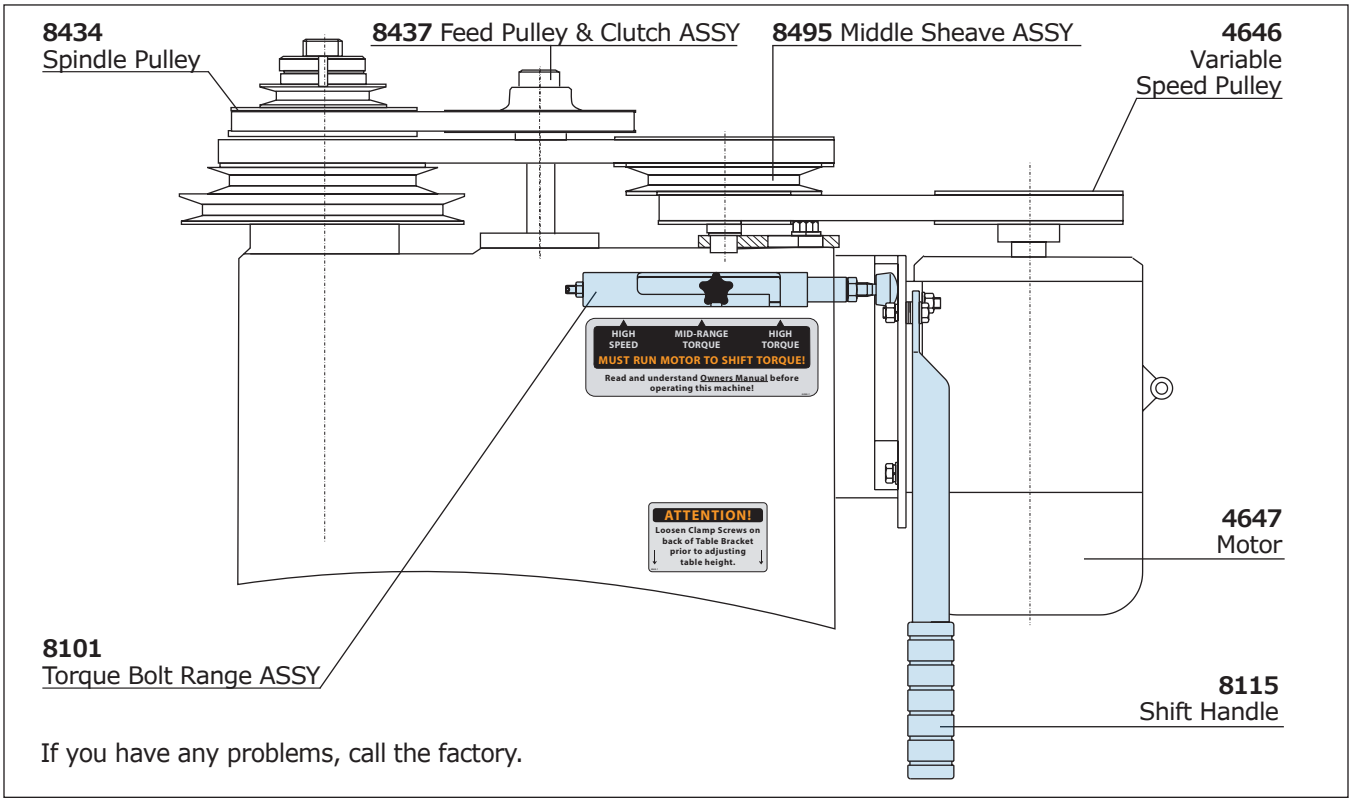

	Spindle RPM									
Torque Range Position ↓	VS Control Box Frequency – Hz → 120	105	90	75	60	45	30	20	15	10
High Speed	1265	1110	950	792	633	473	317	209	156	102
Mid-Range	930	820	705	585	465	350	233	153	115	77
High Torque	570	501	428	358	285	215	143	94	71	46

	Spindle Speed Using VARIABLE SPEED PULLEY Configuration									
Torque Range Position ↓	10%	20%	30%	40%	50%	60%	70%	80%	90%	100%
High Speed	123	244	371	502	615	735	856	973	1092	1207
Mid-Range	92	196	300	392	492	589	685	780	875	970
High Torque	60	122	180	240	324	395	452	515	576	640

	Spindle Speed Using SPRING & 2-STEP PULLEY Configuration									
Torque Range Position ↓	10%	20%	30%	40%	50%	60%	70%	80%	90%	100%
Mid-Range	98	198	297	396	496	595	693	793	894	990
High Torque	65	131	197	262	329	396	460	526	591	656

NOTE: All RPM readings listed are within +/- 3% of reading listed.

POWER FEED AND MANUAL FEED

Manual Feed is accomplished by turning the Handle Hub (#8439) with either Feed Handle (#8474) located on the right side of Drill Press Head.

Power Feed is accomplished by loosening Thumbscrew (#8383) on Handle Hub (#8439). To engage Power Feed, pull either Feed Handle (#8474) to the right, away from Head. To stop Power Feed, push either Feed Handle (#8474) to the left towards the head. To disable Power Feed, tighten Thumbscrew (#8383).

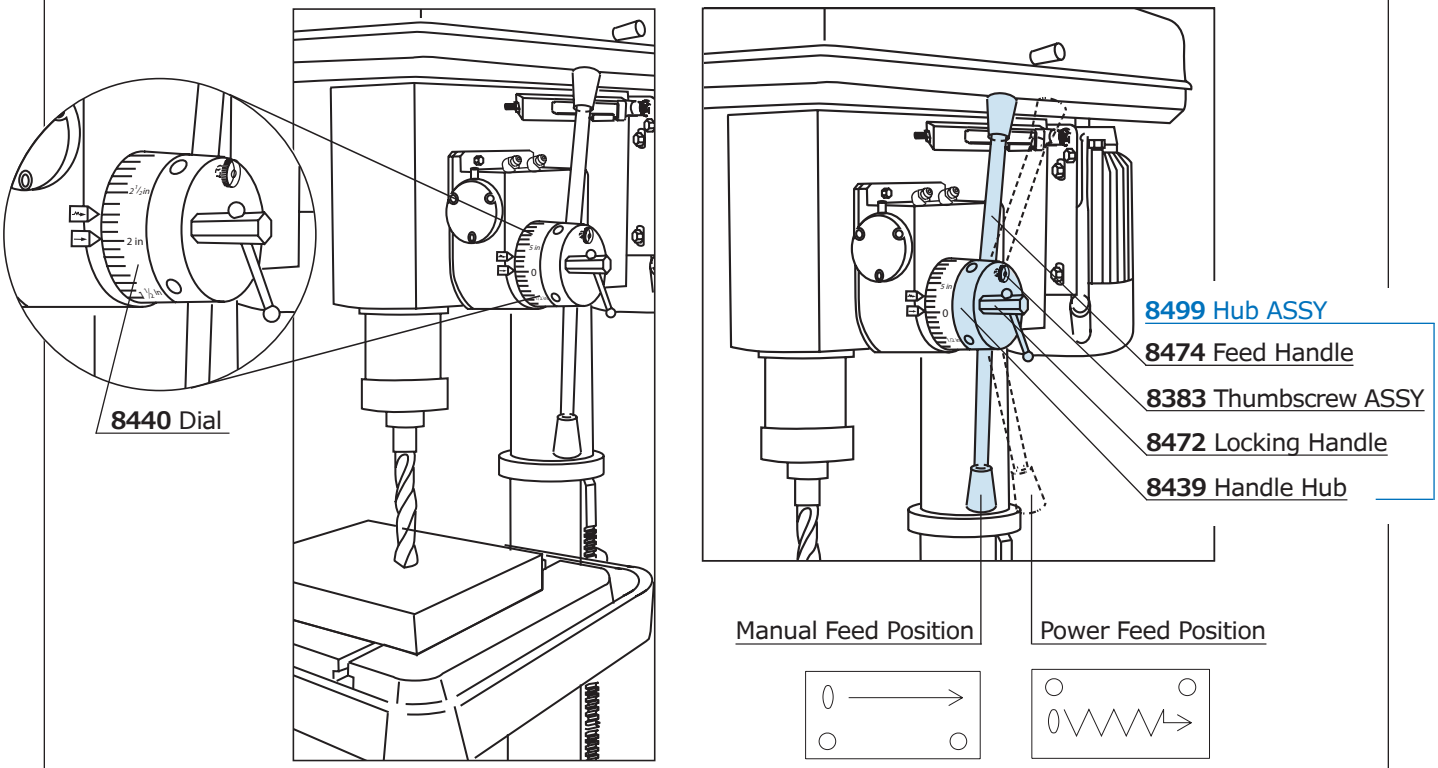

"TO SET" DEPTH OF DRILLED HOLE

1. Loosen Locking Handle (#8472) on Handle Hub (#8439).
2. Lower drill bit to desired depth by turning Feed Handles (#8474).
3. Hold Feed Handles in place.
4. Turn the dial (#8440) CCW (counter-clockwise) until it stops.
5. Retighten Locking Handle (#8472).
6. Drill sample hole.
7. Check the depth.

NOTE: When drilling holes through materials:

8. **Place material in Drill Press Vise. Vise holds material up off the worktable.**
   OR
9. **Place wood or metal under materials being drilled to prevent drilling into the worktable.**

OVERLOAD CLUTCH

1. The Drill Press is equipped with a power feed overload clutch.
2. The overload clutch protects the power train from damage. Cause: spindle speed is too high.
3. When you hear a clicking noise, the overload clutch is working, stopping power from turning drill bit or cutter.
4. Reduce spindle speed when this occurs.
5. The overload clutch is adjustable.
6. There are two (2) adjustment screws in the pulley groove at 180 degrees from each other. **See Figure #8437.**
7. To set maximum torque: turn each adjustment screw (clockwise) until tight, then loosen (counter-clockwise) two full (360 degrees) rotations.

NOTE: Do not tighten the screws too far because a solid spring cannot let the ball escape from the groove in the shaft. In this case, the overload clutch would be rendered useless and damage will occur.

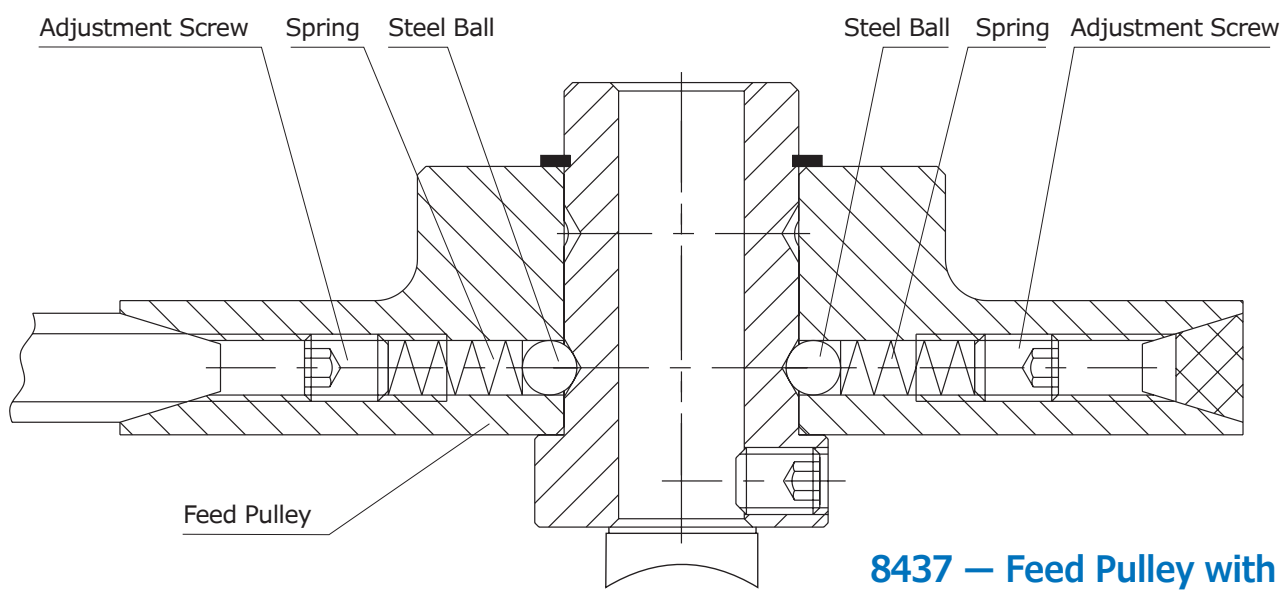

8437 — Feed Pulley with Overload Clutch ASSY

DRILL CHUCK AND ARBOR

INSTALLING DRILL CHUCK AND ARBOR (FIGURE A)

The Ellis 9400 Drill Press comes with a Morse Taper #3 (MT3).

1. Clean the inside taper in the drill press spindle.
2. Clean the outside of the tapers on the drills and chucks.
3. To insert the MT3 arbor into the spindle:
   - **a.** Insert arbor in hole and turn until taper falls into slot. Push up firmly or tap with soft hammer.
   - **b.** Place a block of wood on the table under drill or chuck (#8649).
   - **c.** Using Feed Handles, press down to seat arbor into spindle of drill press.

REMOVING DRILL CHUCK AND ARBOR (FIGURE B)

1. Lower the Drill Press Spindle until the slot is visible.
2. Using locking handle (#8472) and dial (#8440), rotate dial CW (clockwise) until it stops (p. 10).
3. Tighten locking handle (#8472)—this holds spindle down in place.
4. **Turn drill chuck or drill (by hand) until slots align.**
5. Insert drift key (#8073) into slot.
6. Hold chuck or drill with one hand while tapping on drift key with hammer.
7. Drill or chuck will come out of slot.

DRILL SPEEDS AND USAGE

The speed at which the drill has to rotate for efficient cutting depends on the type of material being worked and the diameter of the drill.

- Apply cutting oil (fluid) to the drill bit. When drilling deep holes, retract the drill bit often to remove chips.
- Use a low Spindle Speed and High Torque Range for tapping a threaded hole.
- Use a heavy oil or thread cutting fluid to lubricate the tap.
- Reverse the spindle rotation with the reverse switch on the VS Control Box to retract the tap.

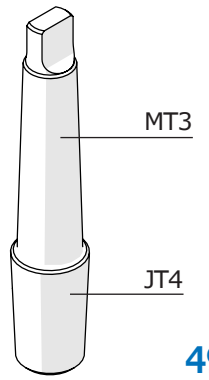

4981 — Arbor

TIGHTENING CHUCK

The Ellis 3/4" drill chuck (#8649) is designed to hold drill bits and taps securely. Adjust the chuck by rotating the sleeve clockwise until it is open more than the size of the shaft. Hold the bit in place and turn the sleeve counter-clockwise until the jaws of the chuck hold the bit in place. Be sure to check that the bit is installed straight. Locate the three (3) pilot holes on the chuck body. Use the 11-point key and insert and tighten each of the three (3) pilot holes under even and firm pressure.

ROTATING, ELEVATING AND CLAMPING THE TABLE (FIGURE C)

The worktable can rotate 360 degrees and move up and down on the column. **Loosen both column clamp screws (#8407)**, rotate the table to the required position, elevate the table by means of the elevating handle (#8406). Then, tighten both clamp screws again. (See Figure C)

WARNING:

Damage will occur to internal table gear components if column clamp screws are not loosened prior to elevating table.

Drill Chuck and Arbor Attachment

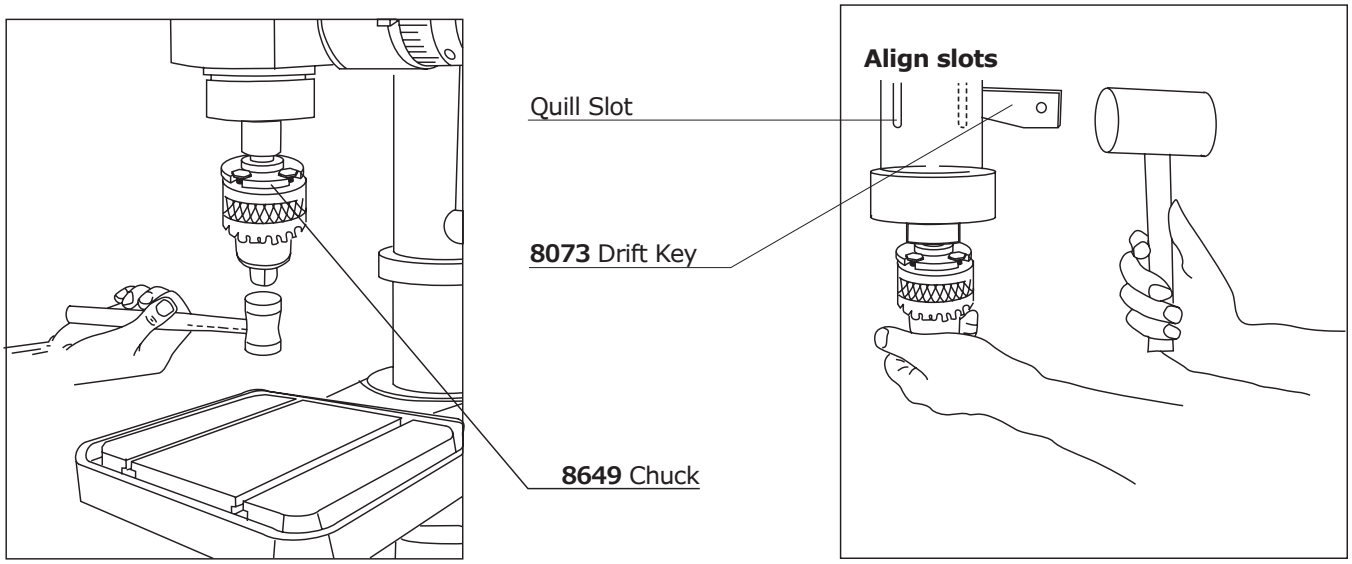

Figure A – Inserting

Figure B – Removing

Elevating, Rotating and Clamping the Table

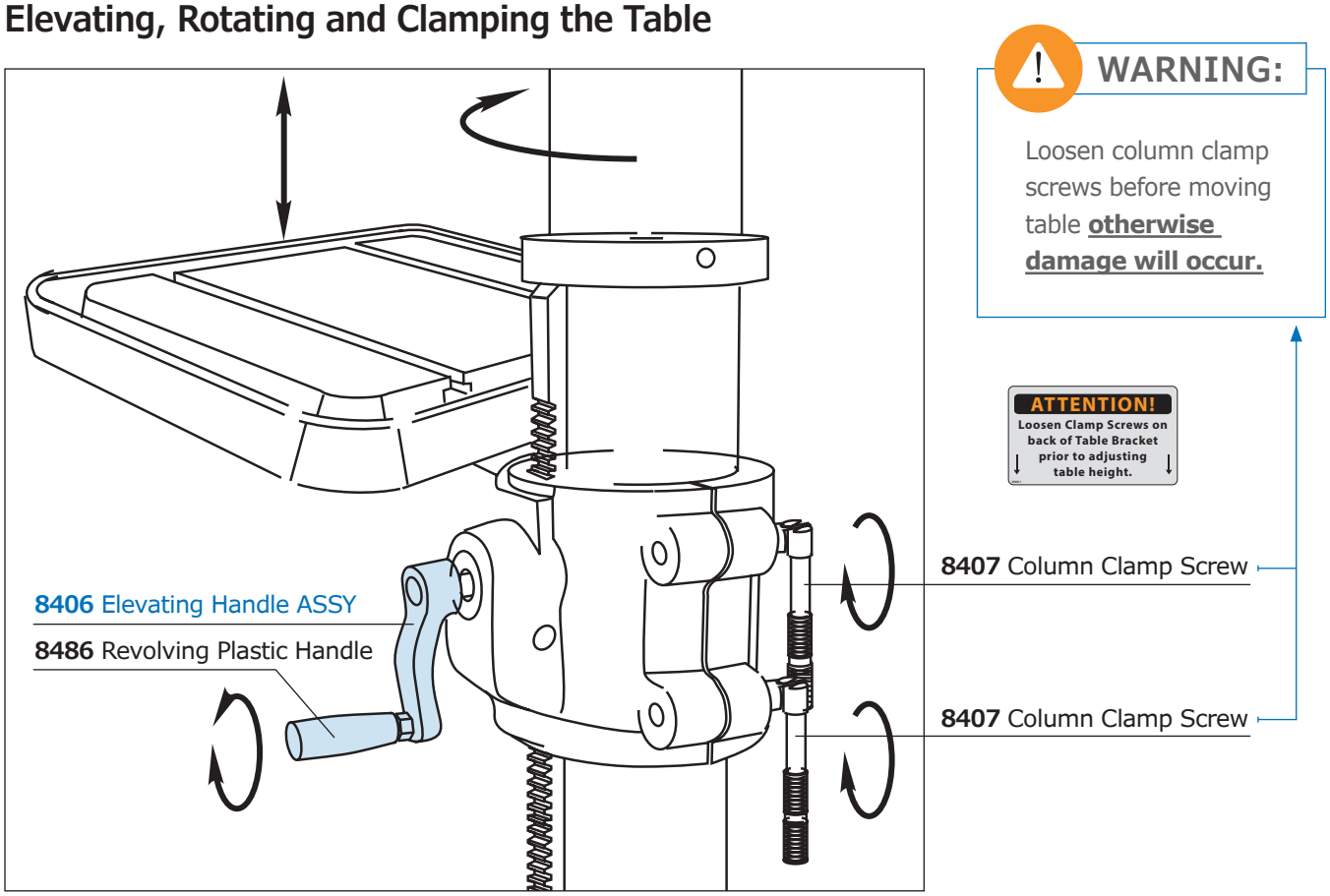

Figure C

PARTS LIST

HEAD ASSEMBLY (For Bearings See Page 17)

Number	Part Number	Name
1	8437	Feed Pulley & Clutch ASSY
2	4938	V-Belt Upper, Power Feed
3	8436	Nut (2)
4	8434	Spindle Pulley
5	8433	Worm Base
6	8432	Spindle Shaft
7	8496	Spindle Pulley, Shaft & Bearing
8	8382	Cover Knob ASSY
9	8431	Cover
10	8430	Spacer
11	8428	Sight Window
12	8429	Spring & Cover
13	8423	Spring Cap
14	8422	Shaft Base
15	8419	Head Stock
16	8418	Gear Shaft
17	4830	VS Control Box ASSY (110V)
18	4831	VS Control Box ASSY (220V)
19	4819	Red Emergency Stop Button
20	4767	Fwd-Rev. Toggle Switch
21	8417	Turbo Worm Gear
22	8416	Counter Block
23	8415	Quill
24	8414	Worm Cover
25	8413	Thrust Plate
26	8412	Nut
27	8440	Dial (Standard Measure)
28	8439	Handle Hub
29	8411	Spindle
30	8493	Spindle & Quill ASSY
31	4939	V-Belt Lower, Front Drive
32	8495	Middle Sheave ASSY
33	8476	Swivel Base Weldment
34	8081	Set Screw (included with #35)
35	4646	Variable Speed Pulley
36	4943	V-Belt, Rear Drive

Number	Part Number	Name
37	4647	Motor, 2HP (1.5KW)
38	8475	Motor Mounting Plate ASSY
39	8121	Motor Fan Cover
40	8122	Motor Junction Box Cover (not pictured)
41	8115	Shift Handle
42	8498	Hinge Pin - Motor Mount
43	8101	Torque Bolt Range ASSY
44	8497	Knob
45	8452	Worm Cover
46	4496	Thrust Bearing
47	8461	Bevel Gear
48	8453	Worm, Double Thread
49	8441	Key
50	8454	Shim Plate
51	8455	Turbo Gear
52	8457	Transmission Shaft
53	8458	Gear
54	8459	Transmission Base
55	4487	Sealed Ball Bearing
56	8461	Bevel Gear
57	8380	Hub & Pawl ASSY
58	8465	Plate
59	8450	Power Feed Unit ASSY
60	8467	Block
61	8468	Power Feed Label
62	8469	Manual Feed Label
63	8470	Worm Housing
64	4487	Ball Bearing
65	8471	Lock Screw
66	8472	Locking Handle
67	8473	Power Feed Bolt ASSY
68	8383	Thumbscrew ASSY
69	8474	Feed Handle
70	8481	Handle Grip
71	8499	Hub ASSY

NOTE: When ordering parts, please provide the serial number located on the Drill Press head.

HEAD ASSEMBLY PARTS EXPLOSION

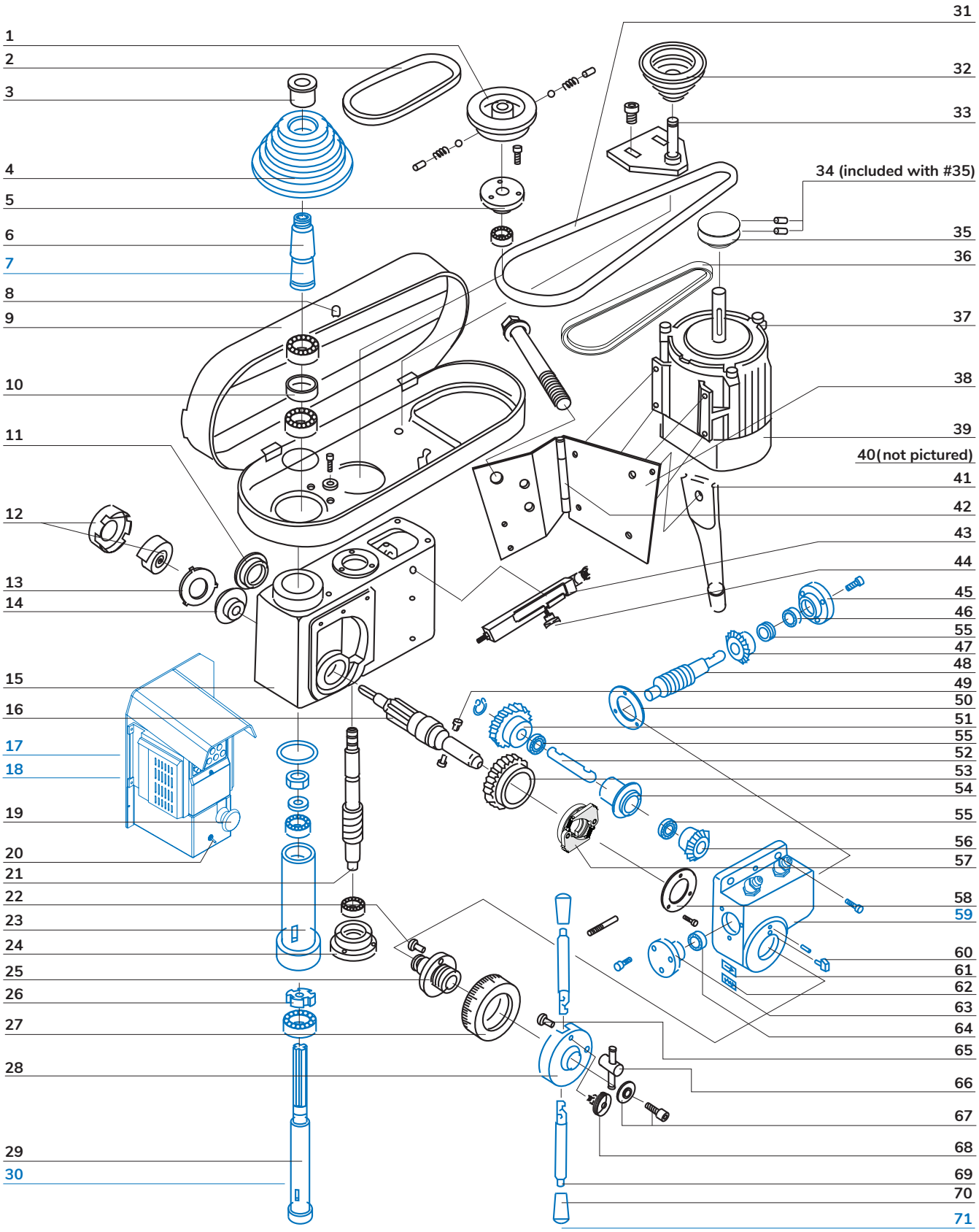

WORKTABLE AND BASE ASSEMBLY

Column Assembly Parts Explosion

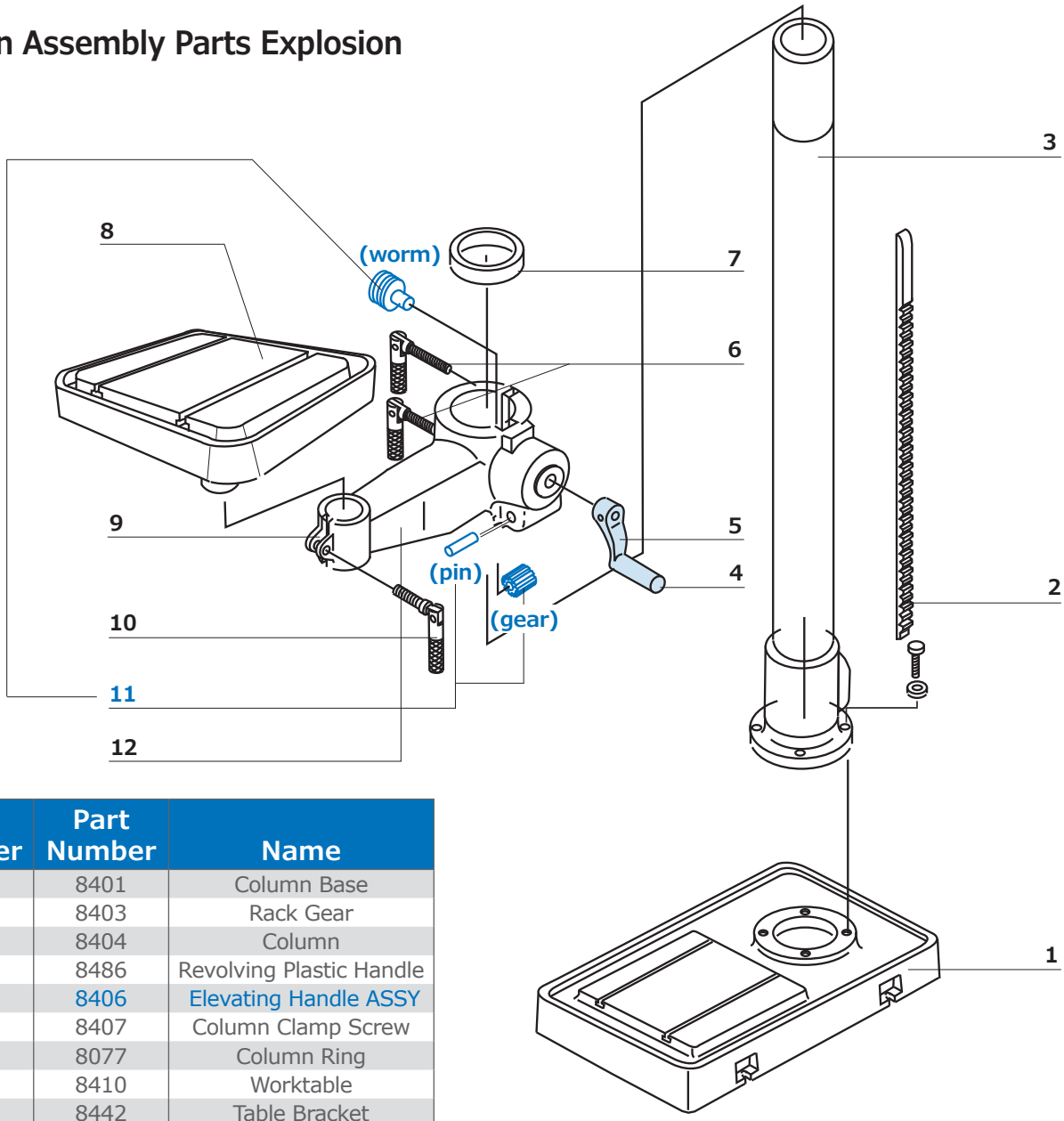

Number	Part Number	Name
1	8401	Column Base
2	8403	Rack Gear
3	8404	Column
4	8486	Revolving Plastic Handle
5	8406	Elevating Handle ASSY
6	8407	Column Clamp Screw
7	8077	Column Ring
8	8410	Worktable
9	8442	Table Bracket
10	8443	Table Clamp Screw
11	8490	Worm Drive ASSY (Includes Axis Pin, Worm, Gear)
12	8492	Table Bracket ASSY (Includes 8442 & 8490)

Note: When ordering parts, please provide the serial number located on the Drill Press head.

BEARING LOCATION

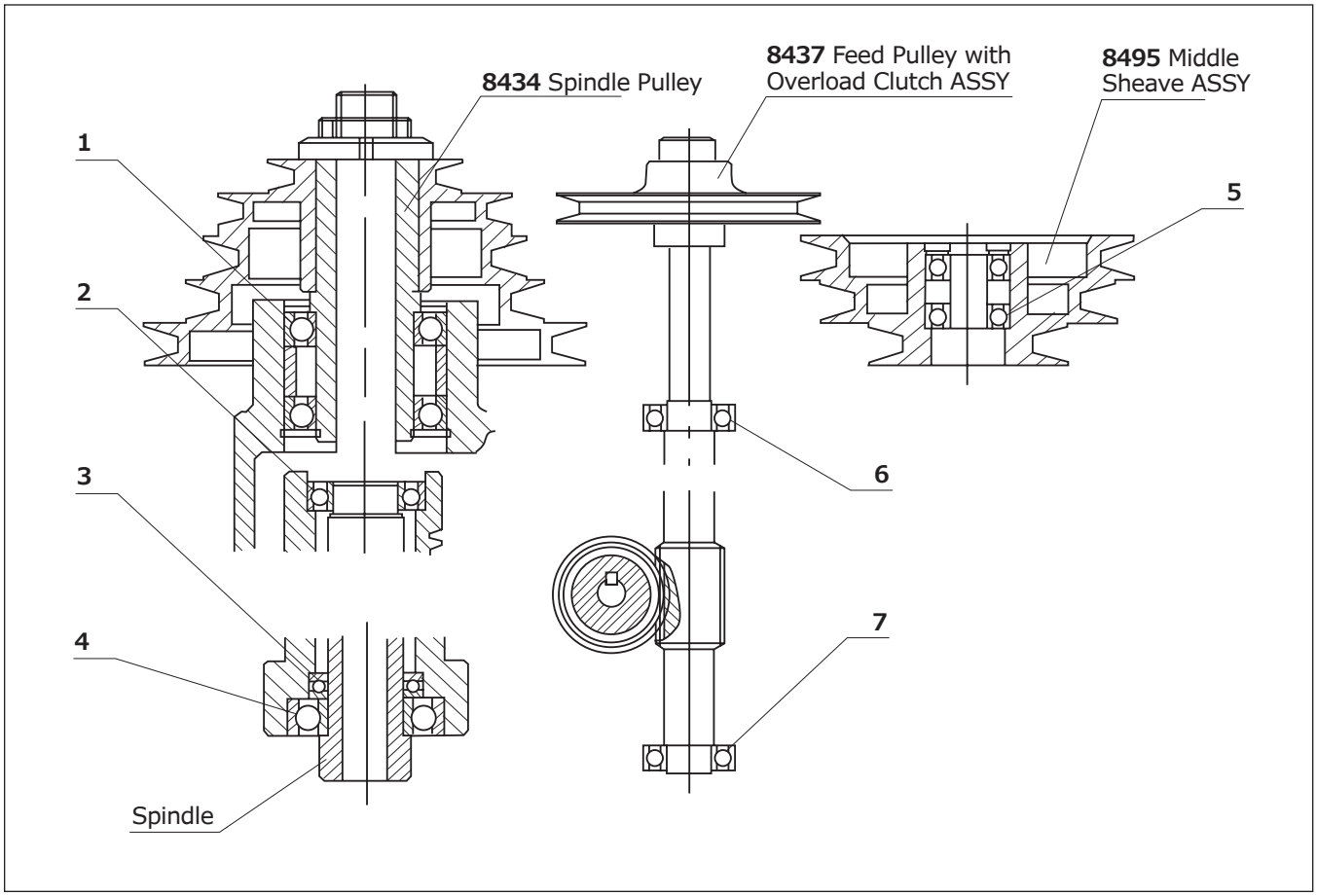

The chart below identifies the bearings in the various locations. The Ellis Part Number is required for replacement orders.

Number	Part Number	Bearing Type	Location	Size	Quantity
1	4490	Deep Groove	Spline-Taper Sleeve	45 x 75 x 16	2
2	4491	Deep Groove	Quill	30 x 55 x 13	1
3	4492	Ball Thrust	Quill	35 x 52 x 12	1
4	4493	Deep Groove	Quill	35 x 72 x 17	1
5	8495	Deep Groove	Middle Sheave ASSY	17 x 40 x 12	2
6	4495	Deep Groove	Single Thread Worm	20 x 42 x 12	1
7	4495	Deep Groove	Single Thread Worm	20 x 42 x 12	1

Note: When ordering parts, please provide the serial number located on the Drill Press head.

LUBRICATION

The Power Feed Unit Box has two (2) grease fittings. It is important that the operator grease the machine frequently. **Use Lithium Grease.** Do not mix synthetic and mineral based grease.

LUBRICATION SCHEDULE

Location	Suggested Lubricant	Frequency
Grease Fittings (2)	Lithium Grease N.L.G.I. #2	Monthly or after 25–30 hours of use

STANDARD MAINTENANCE

- Keep table and sliding parts clean of dirt and chips.
- Every three months lower the quill, wipe clean and oil lightly. If raising the table becomes difficult, clean and wipe the column with light machine oil.
- The ball bearings in the motor, quill and V-Belt pulleys are sealed bearings.
- Keep the cooling fins of the VS Control Box and the motor clean and free of dirt and dust.
- Check V-Belts for tension and excessive wear.

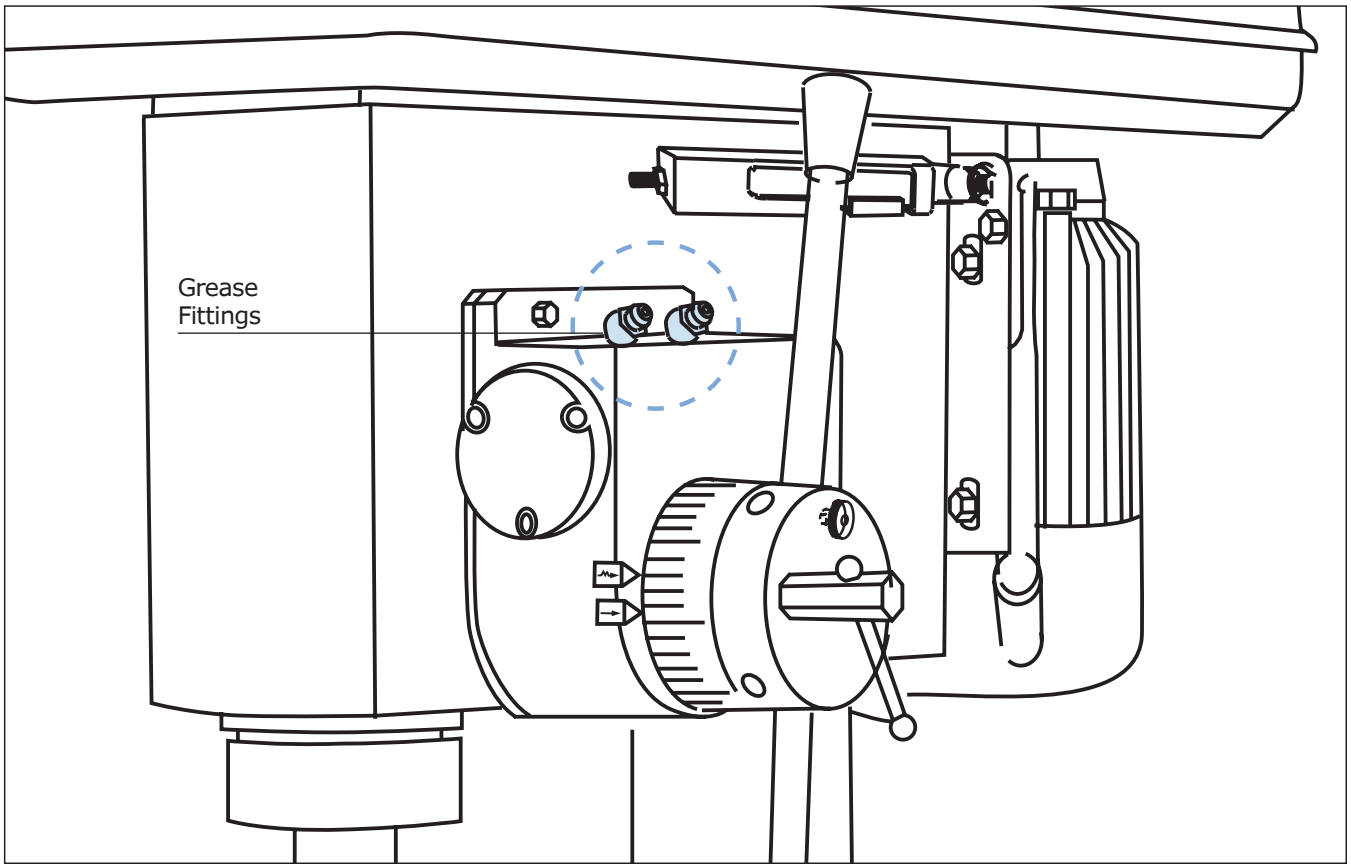

TROUBLESHOOTING

Problem	Probable Cause	Remedy
Motor does not run	Power cord not plugged into source	Plug into receptacle
	VS Control Box not "ON"	Push and turn Emergency Stop Button
	Speed Dial in "0" position	Turn dial counterclockwise for more speed
	Motor is too hot—heat switch tripped	Wait for motor to cool off
	Power cord plugged into GFCI protected outlet	Plug into an unprotected outlet, preferably a dedicated circuit of 20 amp, 115 VAC
	Power cord not plugged into correct outlet	Power cord of a 115V single phase machine has to be plugged into a 115V outlet. A cord of a 230 single phase machine has to be plugged into a 230V outlet.
Noisy Operation	Incorrect belt tension	Adjust tension
	Loose spindle or motor pulley	Tighten set screw #8081
	Belt is too tight	Reduce belt tension
	Spindle bearing is worn	Replace spindle ball bearing
Spindle not moving up	Return Spring may be broken or Pawl Assembly may be broken.	Replace spiral-spring #8429 or replace Pawl Assembly #8380.
Drill bit smokes or is burnt	Needs lubrication	Lubricate with cutting fluid
	Drill is running in reverse	Change motor rotation
	Dull drill bit	Sharpen or replace drill bit
	Incorrect speed	Change speed
	Chips are not coming out of hole	Retract drill bit frequently to clear out chips
Excessive Drill Run Out	Bent drill	Replace drill
	Chuck jaws not clamping evenly	Install drill correctly
	Worn spindle bearings	Replace ball bearings
No Power Feed	Worm gear is worn	Replace worm gear
	Overload protection device not working	Tighten springs with adjustment screws
	Pawl clutch is worn	Replace Hub and Pawl Assembly #8380
	Feed belt is sliding	Tighten belt
	Feed Handles do not move sideways	Loosen thumbscrew #8383
Hole Depth Not Correct	Depth dial not clamped	Tighten dial lock
	Worm gear or quill is worn	Replace gear
Drill Not Rotating	Taper on chuck slips in spindle	Remove grease and oil from inside taper bore in spindle and outside of taper on chuck. Use mineral spirits.
Spindle Not Rotating in Correct Rotation	Switch on VS Control Box—may not be in the correct position	Use forward switch for standard drilling and cutting. Use reverse switch to retract a tap or tapping for left-hand threads.

MILLING TABLE 1003

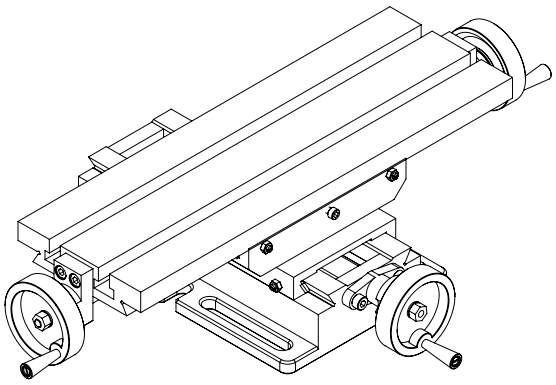

The 9400 is a drill press designed for drilling and tapping. It can provide support for those quick and light milling jobs and is heavy, precise and accurate.

Milling Table Specifications	
Part #	1003
Action	Screw with ball bearings
X Travel	10.63"
Y Travel	4.72"
Cross Travel	7.5"
Longitudinal Travel	11"
Table Length	18.62"
Table Width	6.14"
Base Length	12"
Base Width	8.19"
Height	5.28"
Longitudinal T-Slots	Two (2)
Weight	62 lbs

DRILL CHUCK & ARBOR 8649

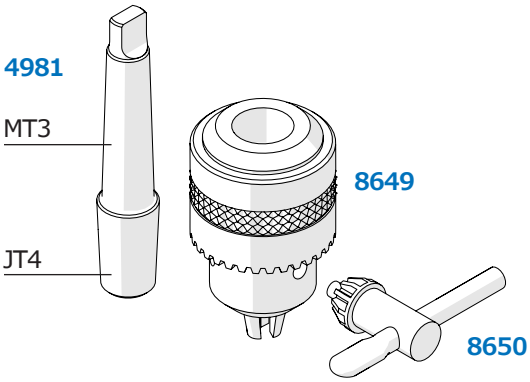

The JT4 drill chuck is designed for heavy-duty drilling applications. The chuck and arbor is ground with high precision for accuracy and efficiency. For best results, tighten the chuck using ALL 3 chuck pilot holes.

Drill Chuck Specifications	
Part #	8649
Description	Includes: Drill Chuck (8649), Arbor (4981), 11 Point Key (8650)
Capacity	1/8"–3/4"
Chuck Taper	JT4
Arbor Taper	MT3 / JT4
Weight	5.78 lbs

6.25" DRILL PRESS VISE ASSY 8237

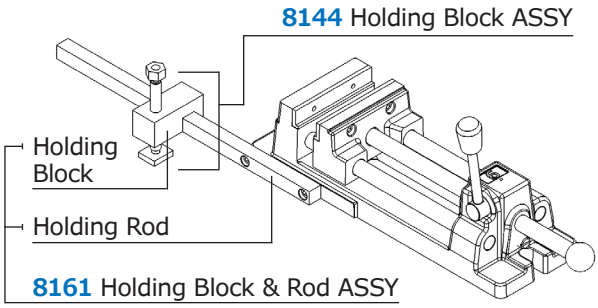

This Ellis Vise will hold and move. It can move in and out on the Holding Block (#8135), which is mounted in the T-slot. It will also pivot left and right for different hole locations in a single part. OR it can be clamped down in the T-slots to a fixed location.

Ellis 6.25" Vise Specifications	
Part #	8237
Action	Cam-lock
Jaw Opening	6.25"
Jaw Width	4.25"
Product Length	13.62"
Material	Cast Iron
Weight	24 lbs

POLYCARBONATE CHUCK GUARD 8655

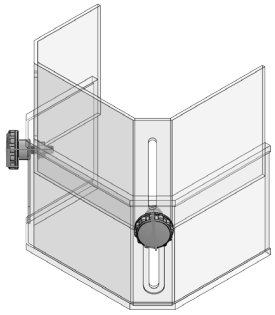

The Chuck Guard protects from accidental contact with the rotating chuck, and from flying chips and shavings. It mounts on the left side of the drill press. Rotates 90° for access to the chuck and easily adjusts vertically. (It can be retrofitted to the Ellis 9400 Drill Press.)

Polycarbonate Chuck Guard Specifications	
Part #	8655
Material	Clear Polycarbonate
Height	Adjustable 4.5"–7"
Width	6.5"

Note: For retrofitting, please provide the serial number located on the Drill Press head.

T-SLOT BOLTS

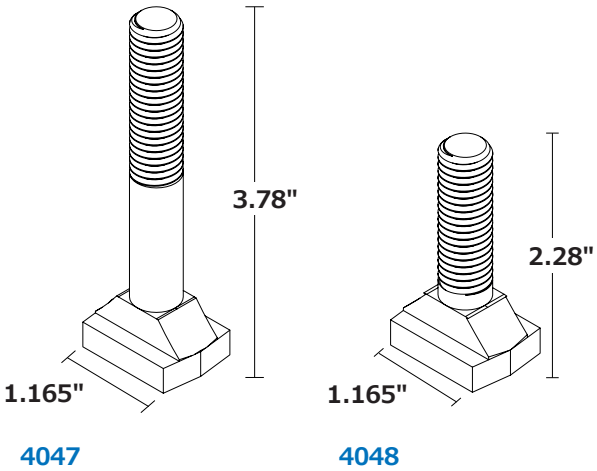

T-Slot Bolt Specifications	
Thread	1/2"–13"
Finish	Black Oxide
Material	Medium Carbon Steel
Critical Function	Head is undersized to fit machine table slot
T-Slot Bolt 4047	
Part #	4047
Slot Size	0.625"
Total Length	3.78"
T-Slot Bolt 4048	
Part #	4048
Slot Size	0.625"
Total Length	2.28"

MAINTENANCE LOG

Date	Maintenance/Service Performed	Initials

Reminder: Use Lithium Grease. Do not mix synthetic and mineral based grease.

OVERVIEW OF TERMS

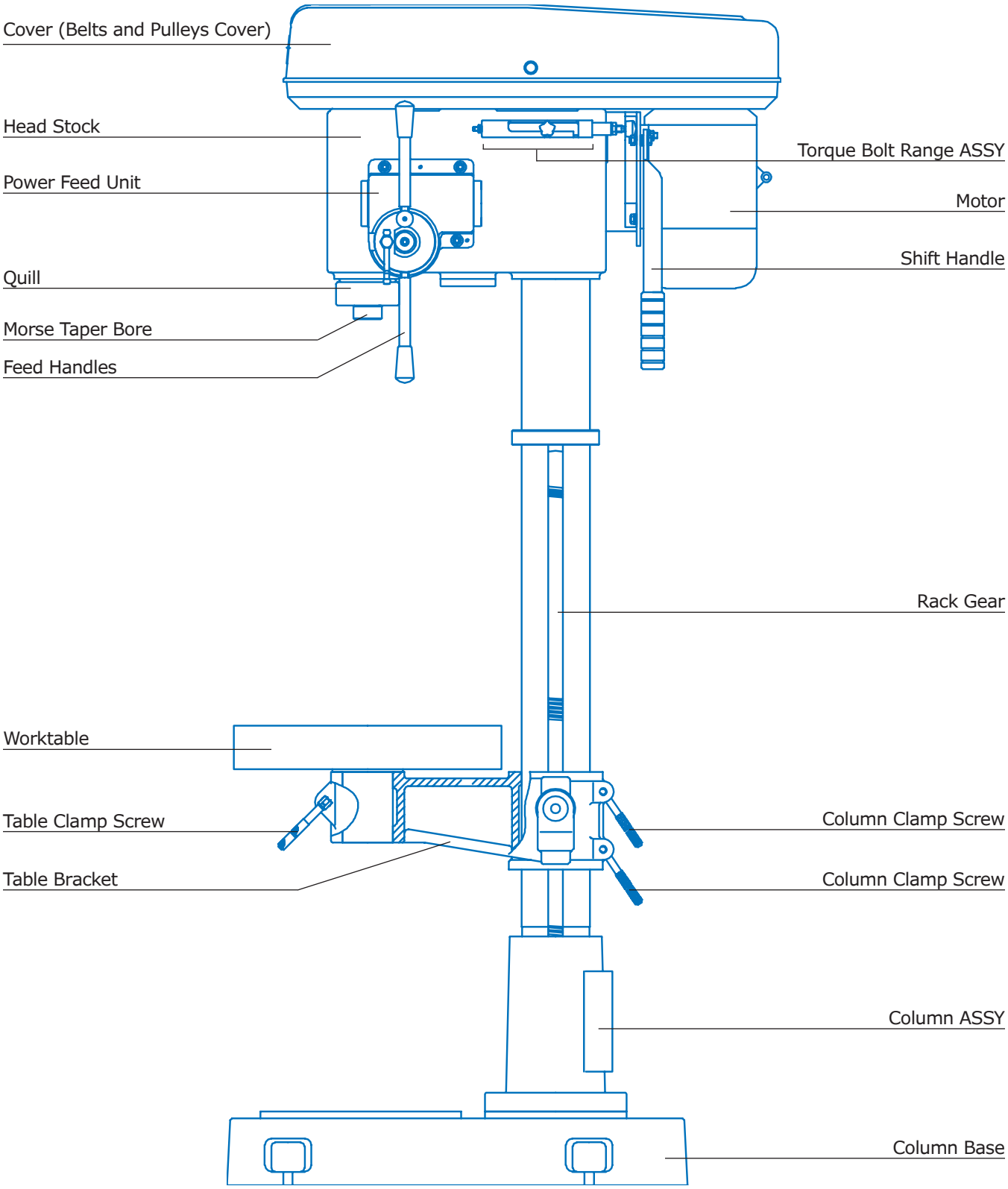

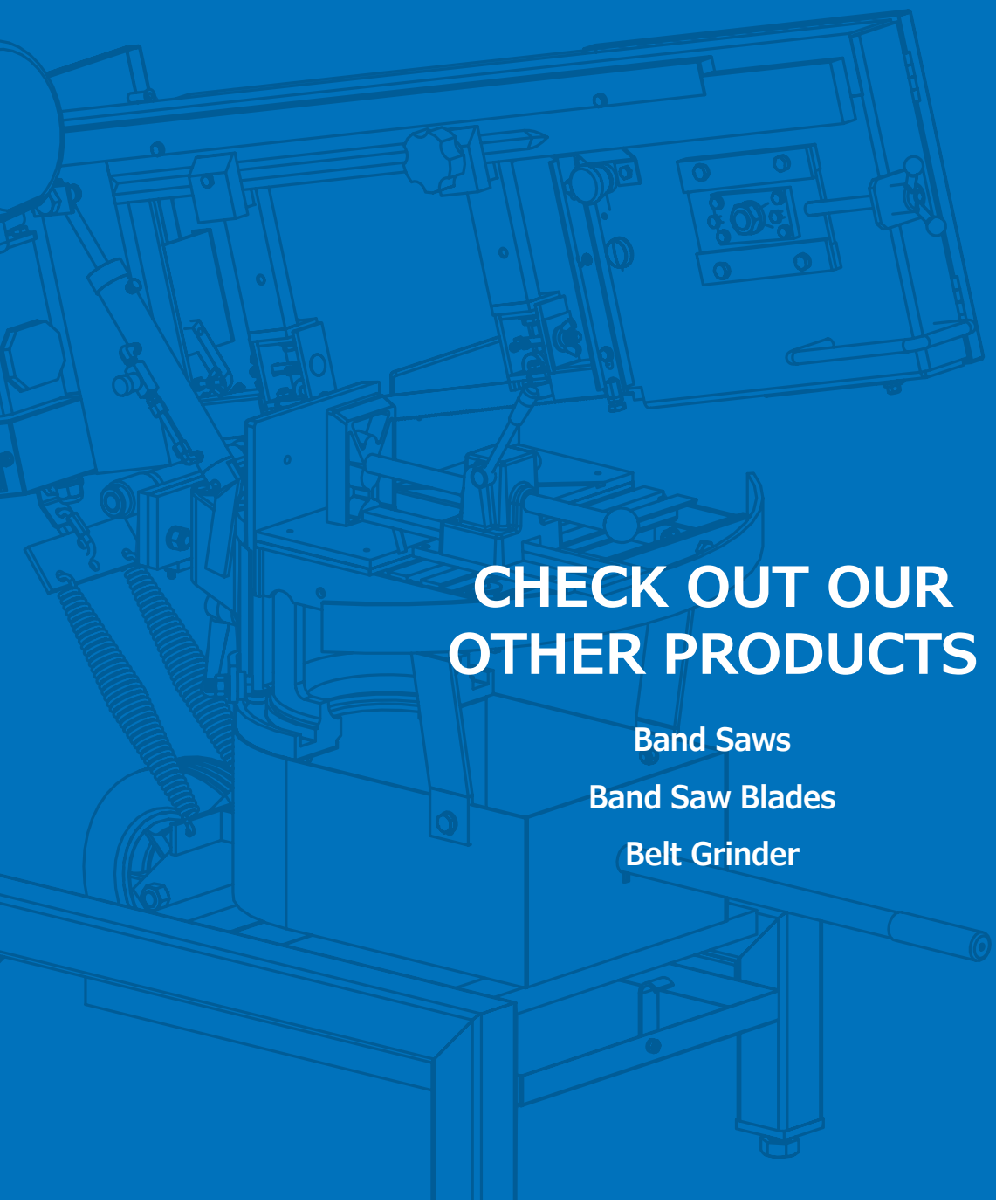

CHECK OUT OUR OTHER PRODUCTS

Band Saws

Band Saw Blades

Belt Grinder

Ellis

www.EllisSaw.com

Ellis Mfg. Company, Inc. • PO Box 930219 • Verona, WI 53593-0219
1-800-383-5547 • 608-845-6472 • Fax 608-845-5199